# 3D Printed Missile Controller Enclosure

# Exploded View

All the screws used are **#2 self-threading** screws with a **black-oxide finish** for aestetics.

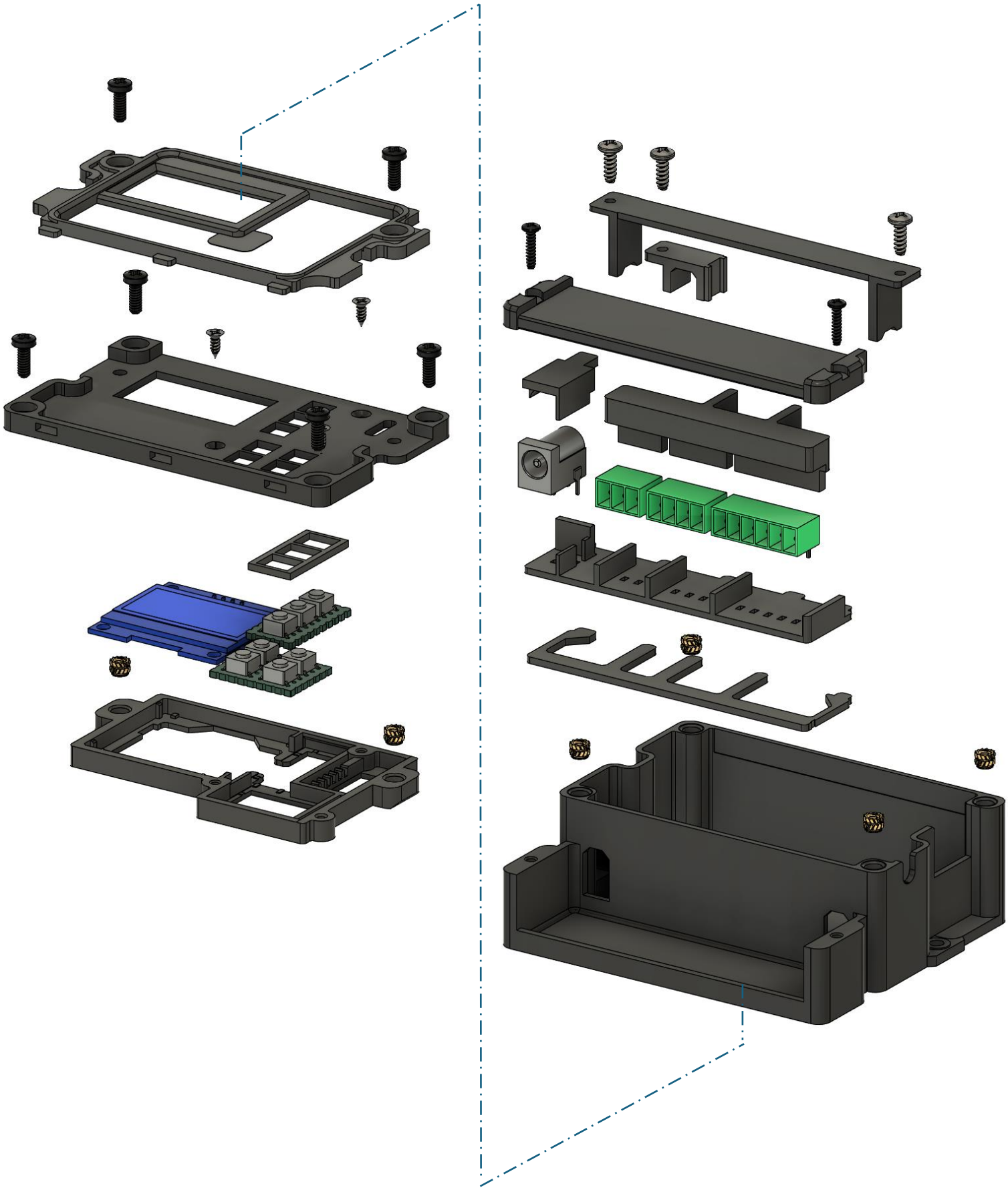

| Line | Qty | Type | Description | Part Num | Price |
|---|---|---|---|---|---|
| 1 | 6 | screw | 4-40 5/16" PanHead Phillips Steel BlackOxide | 92224A113 | $5.64(100) |
| 2 | 3 | screw | #4 5/16"L RoundHead BluntSheetMetal | 92525A203 | $5.11(100) |
| 3 | 3 | screw | #2 1/4"L FlatHead Phillips ForMetal 18-8Stainless | 90065A077 | $2.88(100) |
| 4 | 2 | screw | #2 3/8"L SheetMetal Blunt RoundHead 18-8SS | 92525A118 | $4.71(100) |
| 5 | 6 | insert | 4-40 0.135"L HeatSet for Plastic | 94459A250 | $9.91(50) |
| 6 | 1 | printPLA | FrontBezel | | |
| 7 | 1 | printPLA | FrontCover | | |
| 8 | 1 | printPLA | DisplayMount | | |
| 9 | 1 | printPLA | SwitchSpacer | | |
| 10 | 1 | printPLA | FrontConnectorLabelMount | | |
| 11 | 1 | printPLA | EnclosureShell | | |
| 12 | 1 | printPLA | ConnectorLabelMount | | |
| 13 | 1 | printPLA | PCBStop | | |
| 14 | 1 | printPLA | PowerJack-Lock | | |
| 15 | 1 | printPLA | ConnSpacerBot-DC-3.81mm3P4P6P | | |
| 16 | 1 | printPLA | ConnMountBot-DC-3.81mm3P4P6P | | |
| 17 | 1 | printPLA | ConnMountTop-DC-3.81mm3P4P6P | | |
| 18 | 1 | printPLA | MountingPlate | | |
| 19 | 1 | undef | OLED-1.3in | | |
| 20 | 1 | undef | Jack-Power | | |
| 21 | 1 | undef | Conn-3.81mm-3P | | |
| 22 | 1 | undef | Conn-3.81mm-4P | | |
| 23 | 1 | undef | Conn-3.81mm-6P | | |
| 24 | 1 | undef | SwitchGroupTriAssem | | |
| 25 | 1 | undef | SwitchGroupQuadAssem | | |
| 26 | 1 | undef | PCB-6cmx8cm | | |
| 27 | 1 | undef | Header-Female-0.35H-15p | | |
| 28 | 1 | undef | Header-Male-16p | | |
| 29 | 1 | undef | ItsyBitsyPCB | | |
| 30 | 2 | undef | ConnSpring100mil10pos | | |